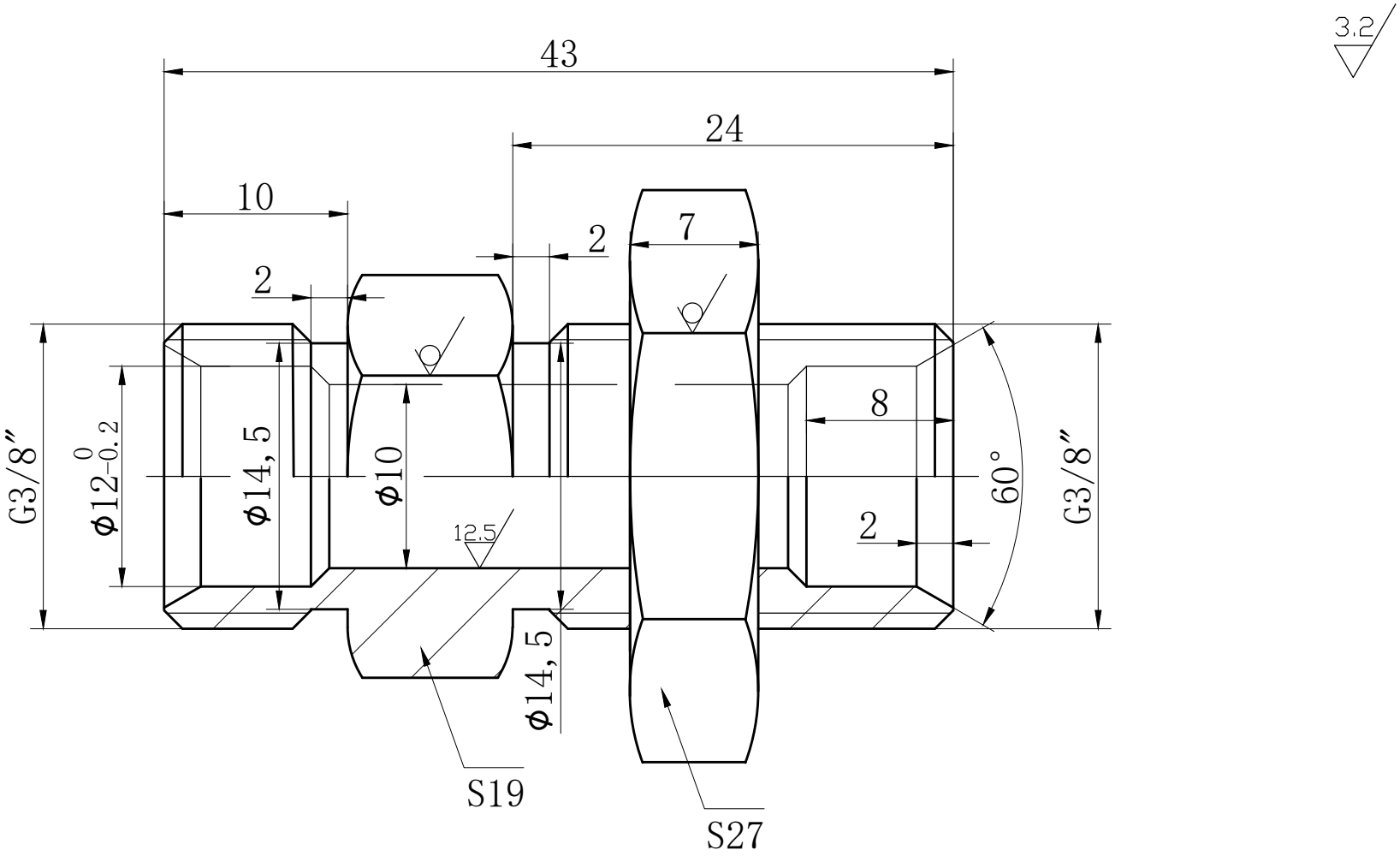

					Bulkhead unions 3/8″			
		MATERIAL	316					
		DATE	2022.11.17		QINGDAO MR METALS CO.,LTD			